GX73-70246-A-A-01-01-Service (X760-JO81P90)

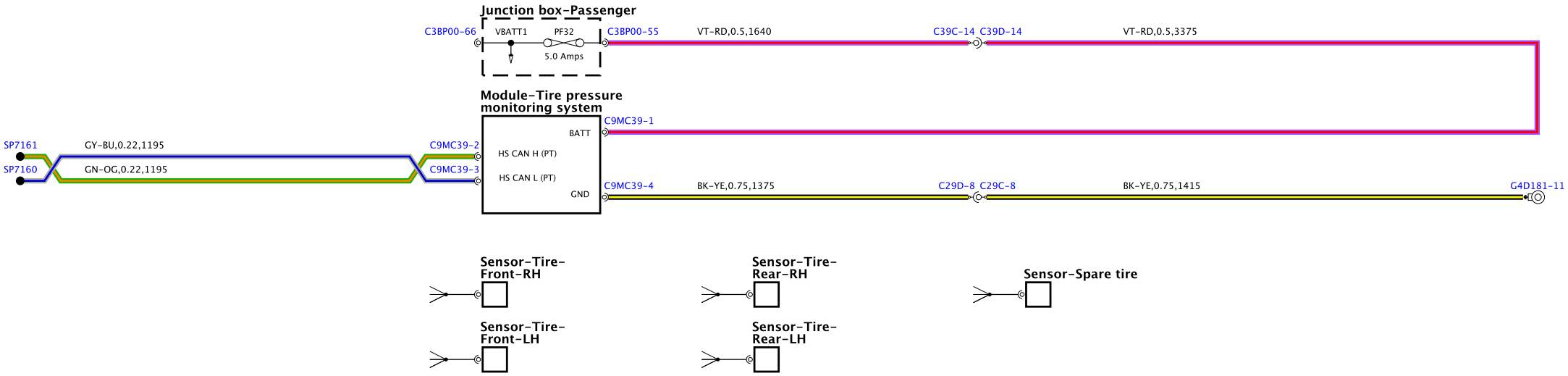

www.car60.com